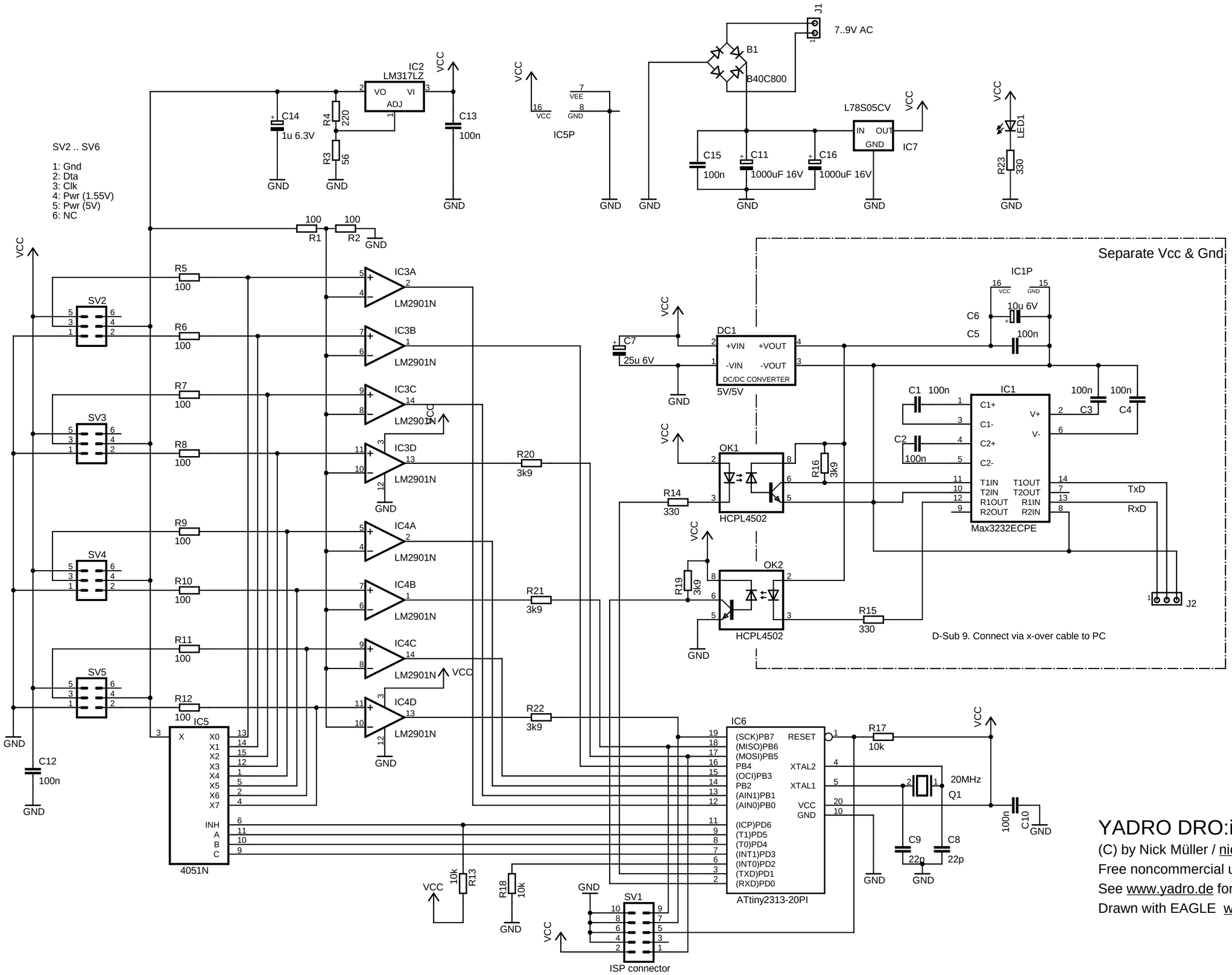

YADRO DRO:int4 V0.2b Mar 2006

(C) by Nick Müller / nick@yadro.de
Free noncommercial use allowed.
See www.yadro.de for details and code.
Drawn with EAGLE www.cadsoft.de